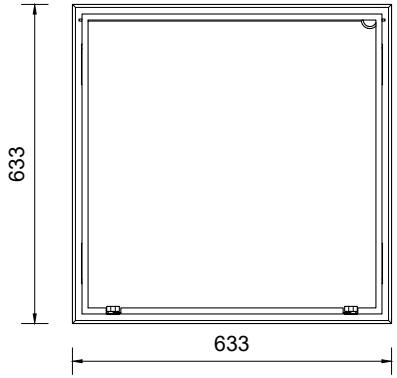


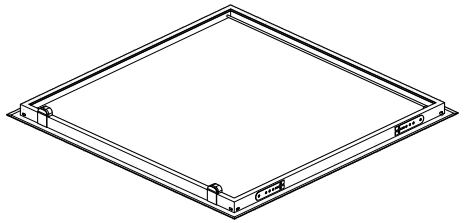

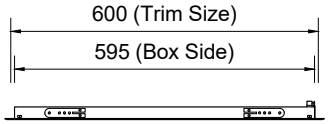


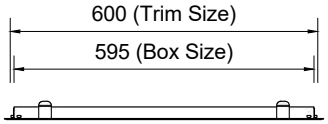


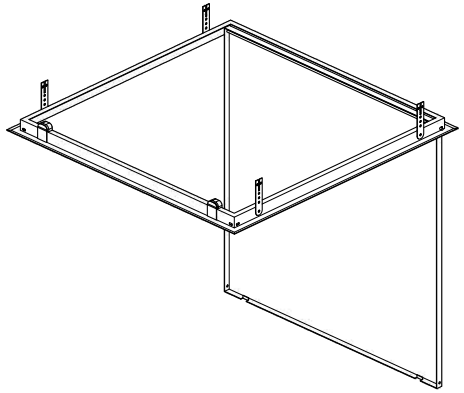

 **CH600600 Ceiling Hatch** | Material: Steel | Finish: Powdercoated (White)

09 477 0820 | www.sellwood.co.nz

sellwood