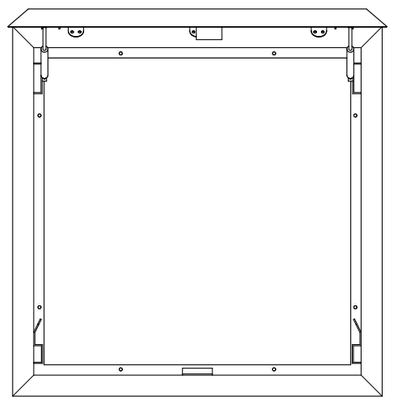

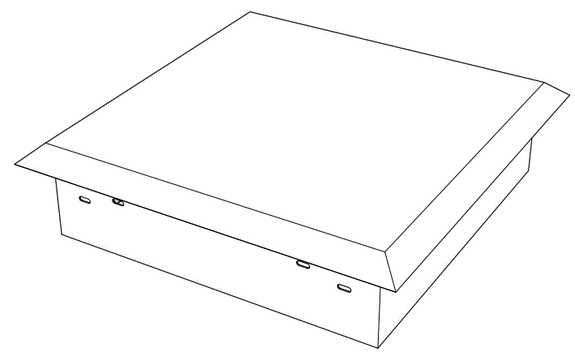

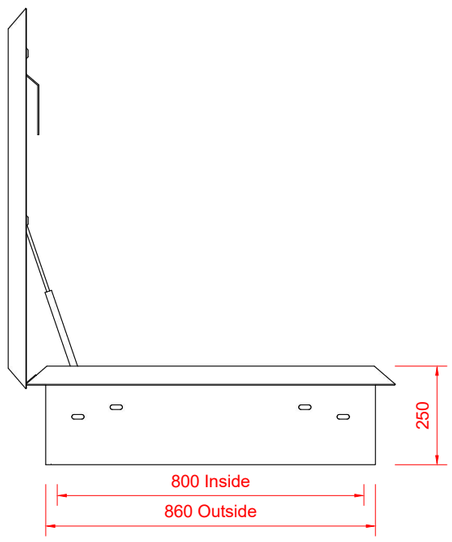

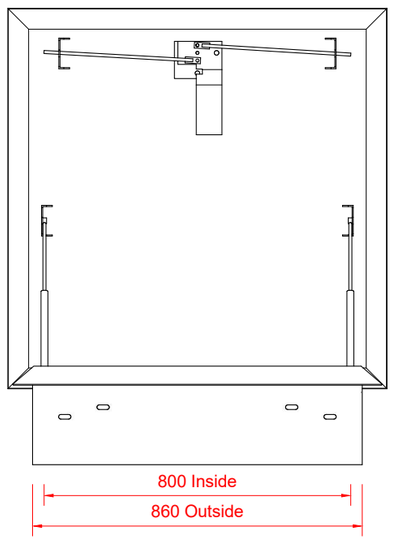

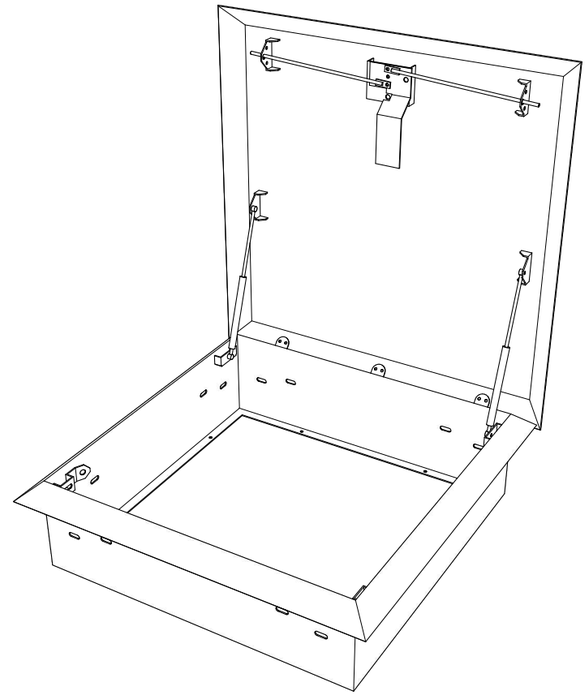

A	01	sellwood roof space access | attic storage | natural lighting	Address Sellwood Products Ltd 3/75 Apollo Drive Albany, Auckland © 2015	File Name Roof Hatch Page Name Page 1	Date Created January 2016 Date Modified November 2016	Drawn By RLB Page Size A3	Material Marine Grade Aluminium	Finish Powder Coated Ghost Grey	Notes	Model **SRH800800**