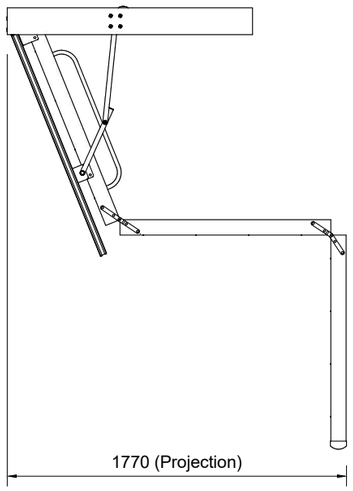
1770 (Projection)

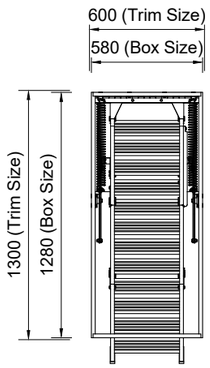
600 (Trim Size)
580 (Box Size)
1300 (Trim Size)
1280 (Box Size)

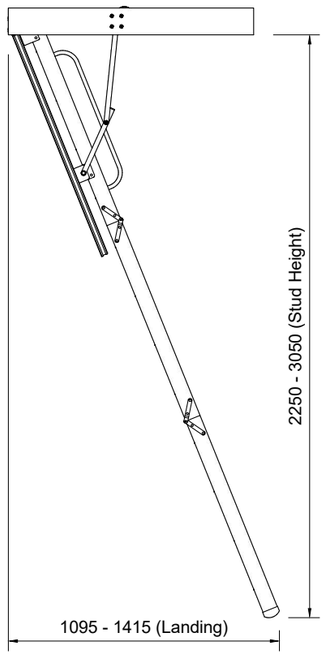
2250 - 3050 (Stud Height)
1095 - 1415 (Landing)

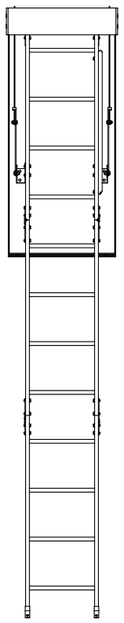

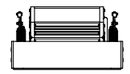

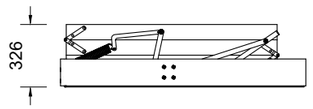
326