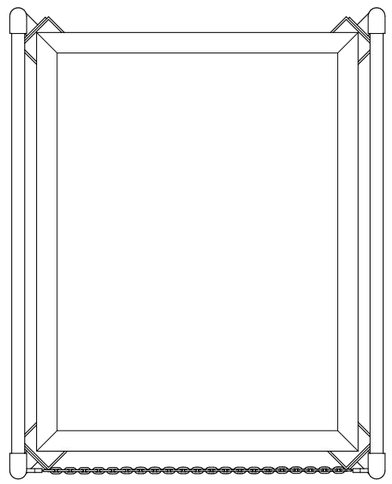

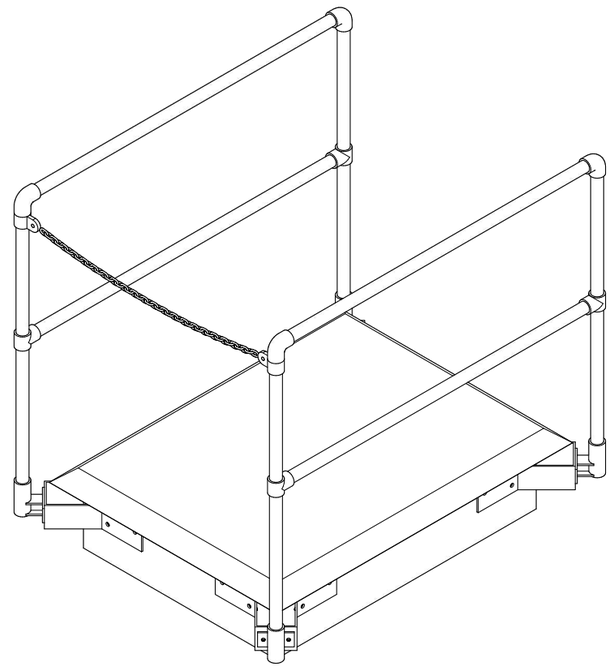

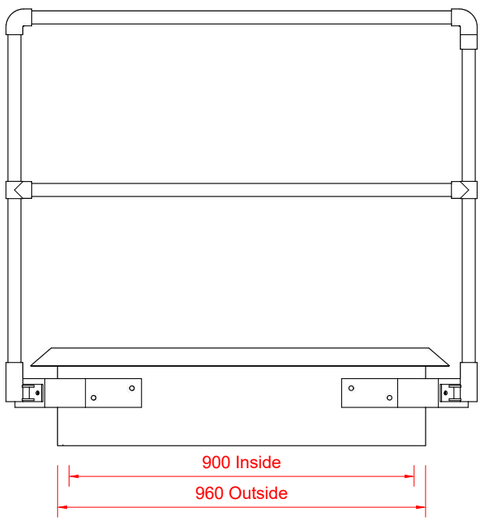

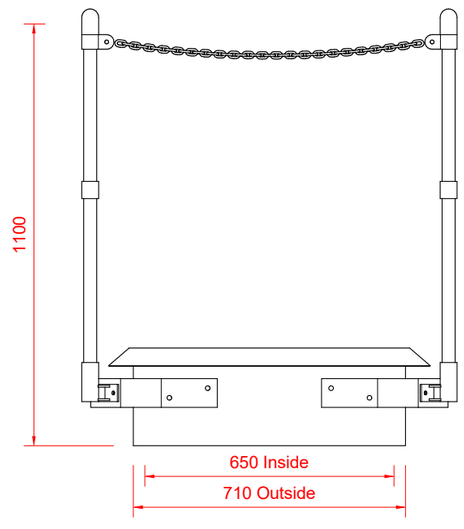

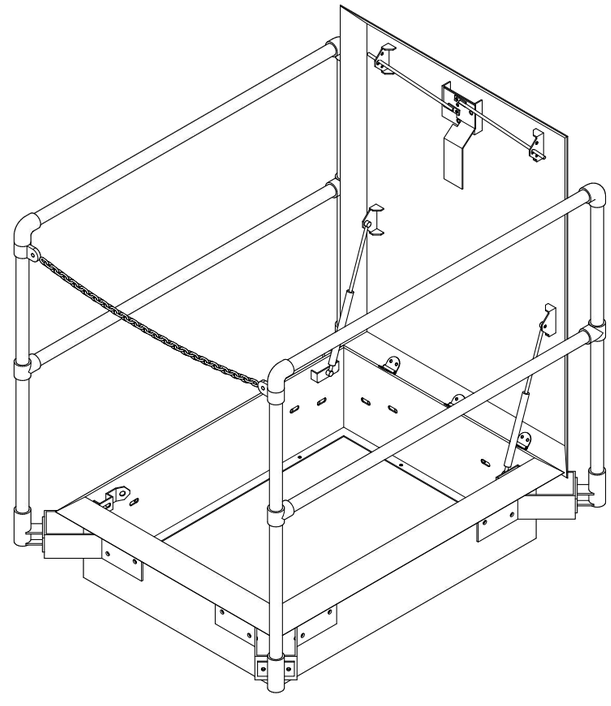

A 01

sellwood

roof space access | attic storage | natural lighting

Address
Sellwood Products Ltd
3/75 Apollo Drive
Albany, Auckland
© 2015

File Name
Roof Hatch & Barrier
Page Name
Page 1

Date Created
January 2016
Date Modified
November 2016

Drawn By
RLB
Page Size
A3

Material
Roof Hatch - Aluminium
Barrier - Steel & Cast Iron

Finish
Hatch - Powder Coated
Barrier - Galvanised

Model
SRH650900
RHB650900