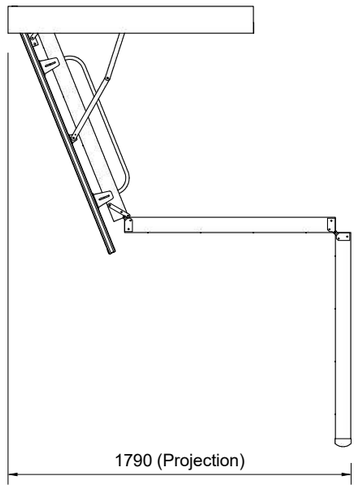

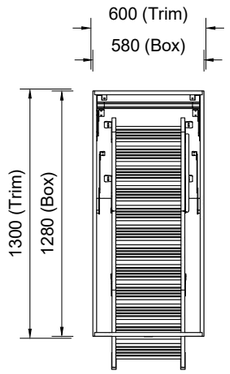

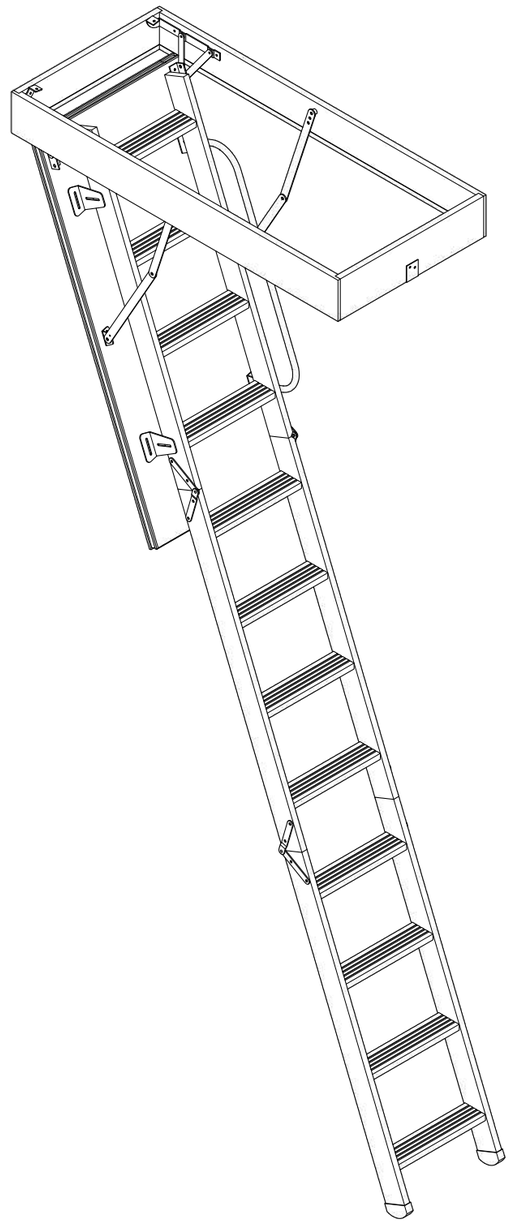

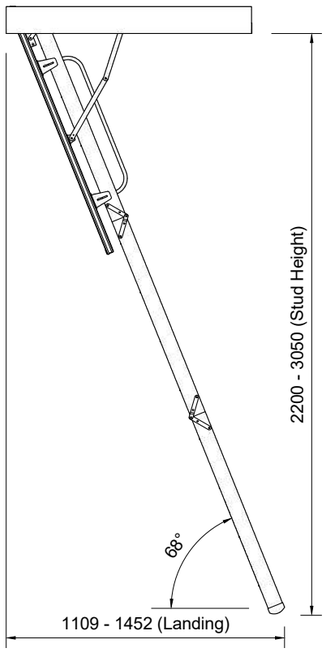

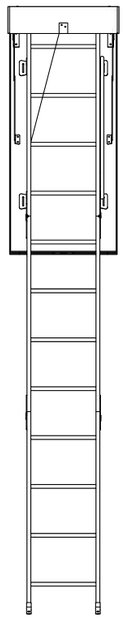

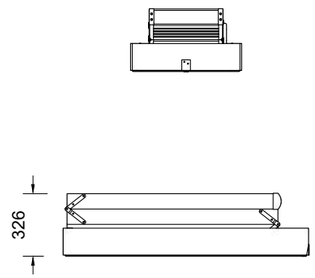

1 **FT30 Attic Ladder**

sellwood.co.nz