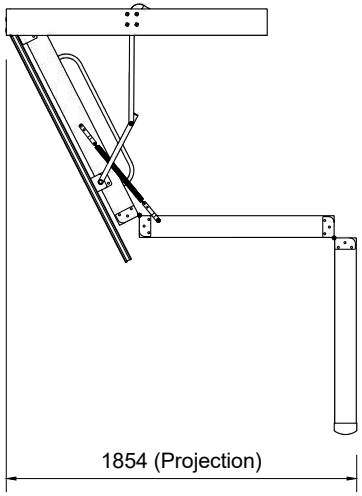
1854 (Projection)

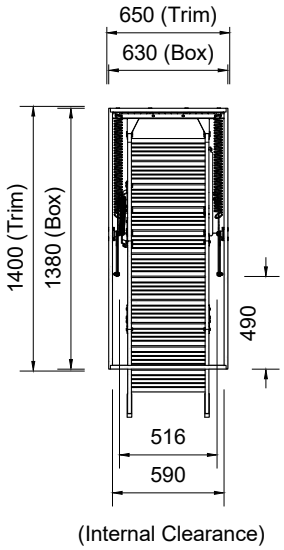
650 (Trim)
630 (Box)
1400 (Trim)
1380 (Box)
490
516
590
(Internal Clearance)

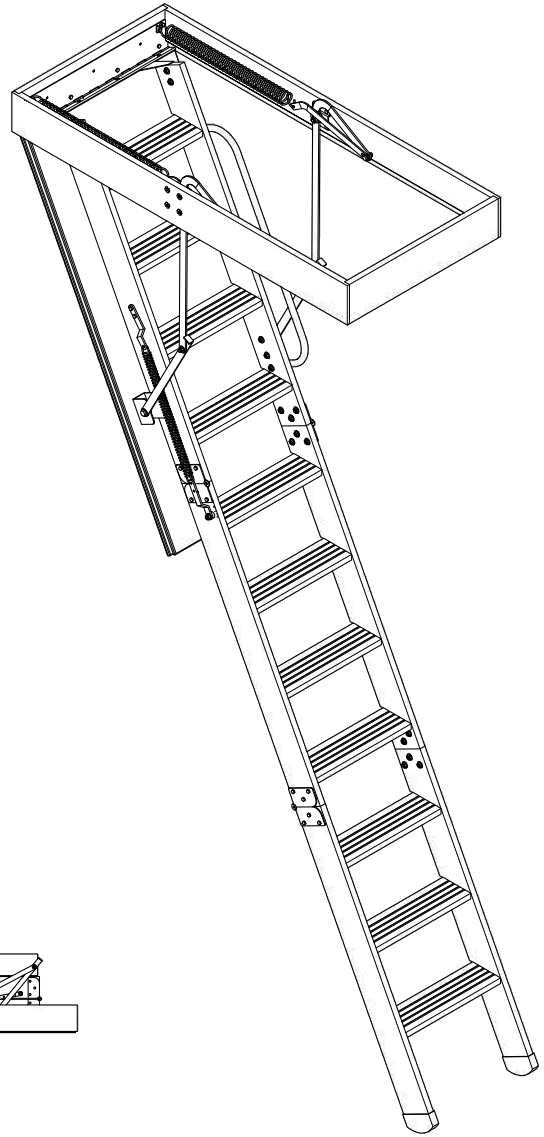

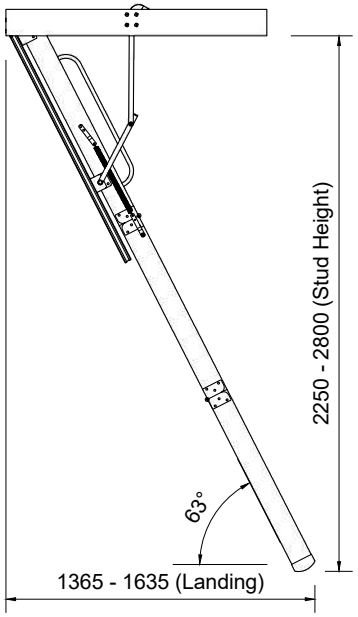
2250 - 2800 (Stud Height)
63°
1365 - 1635 (Landing)

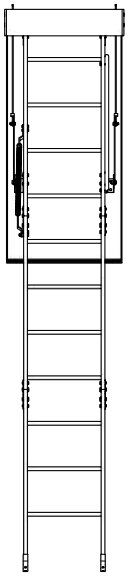

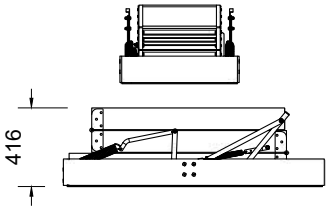
416