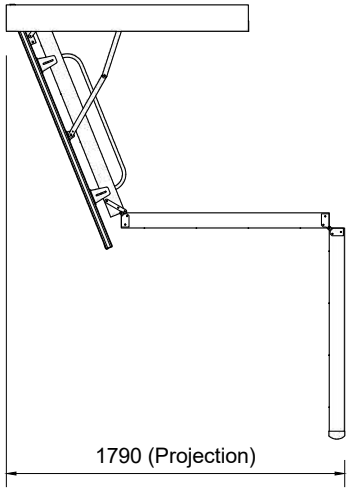

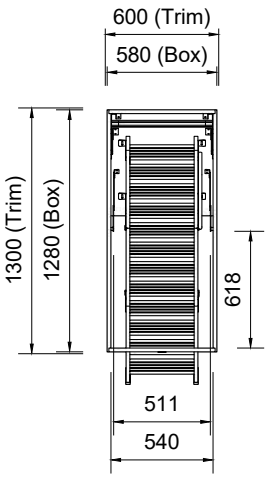
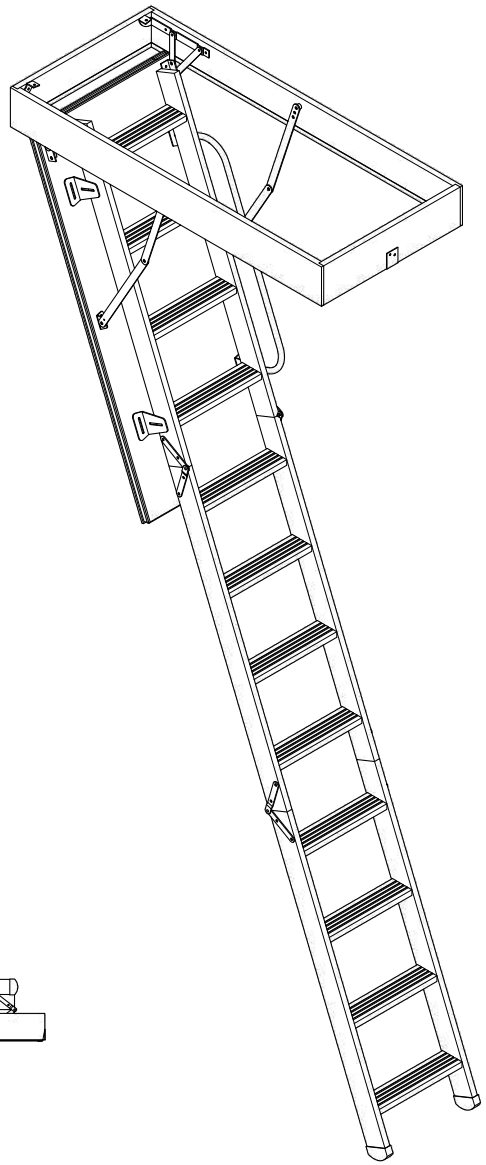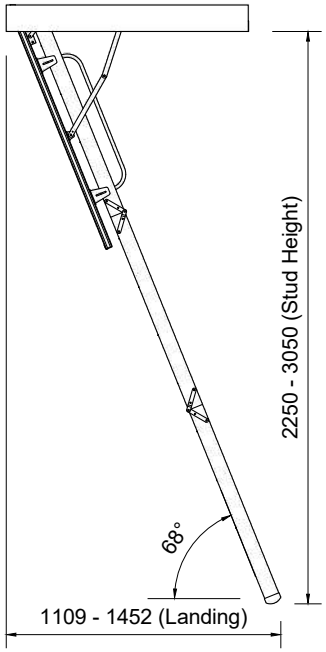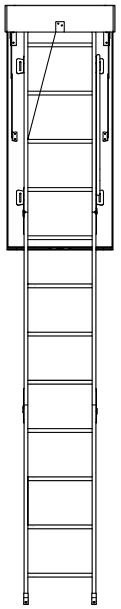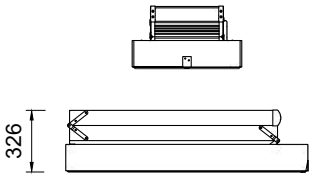
(Internal Clearance)