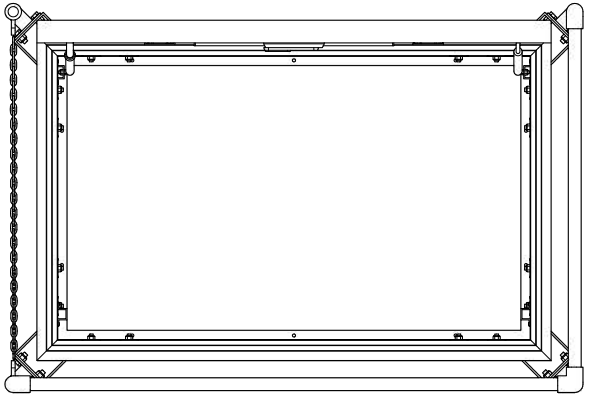

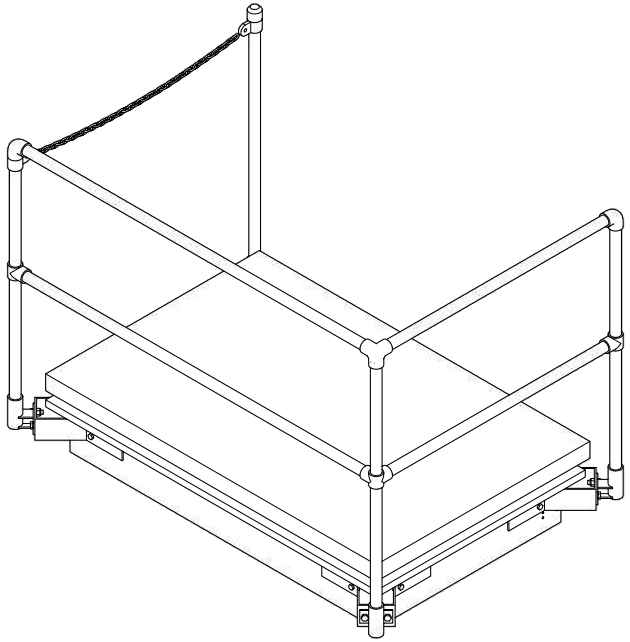

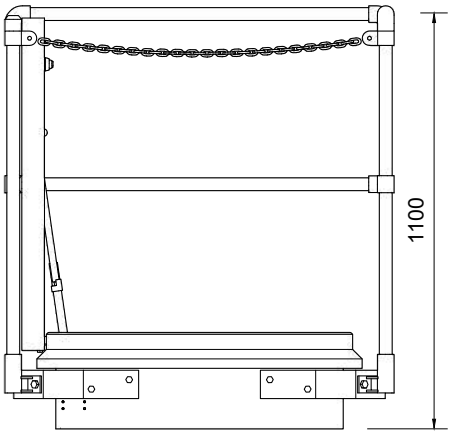


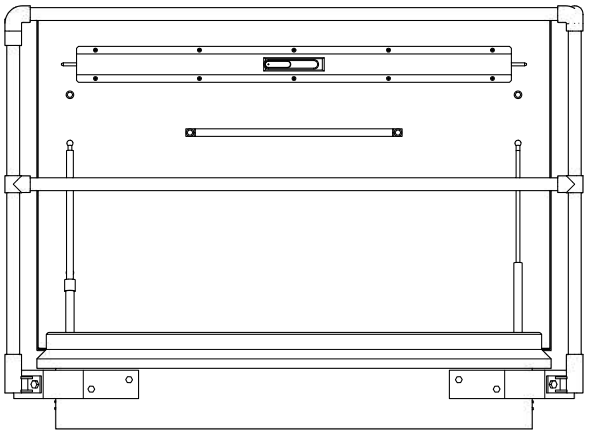

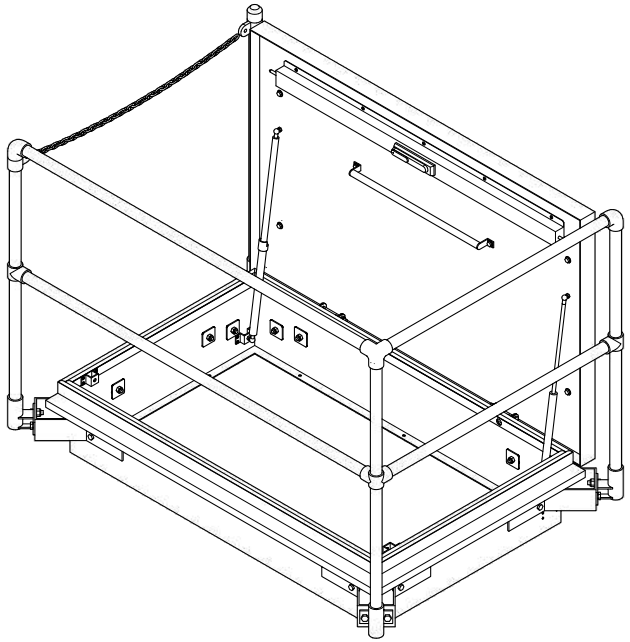

 **RHB1200700 Roof Hatch Barrier** for SRH1200700 | Material: Steel & Cast Iron | Finish: Galvanised

09 477 0820 | www.sellwood.co.nz

sellwood