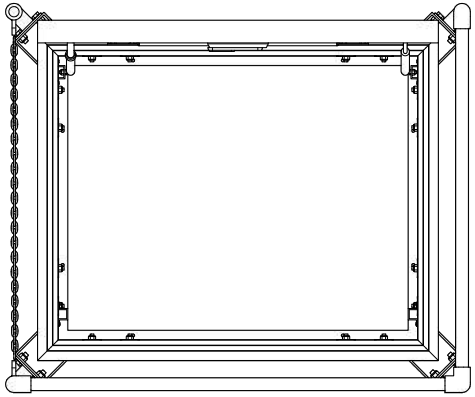

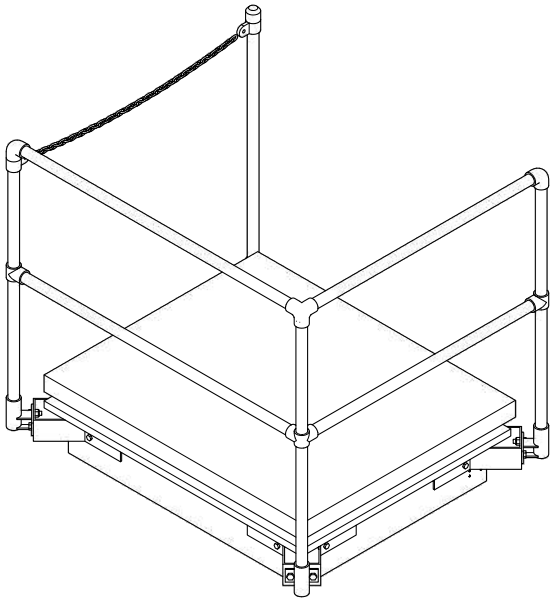

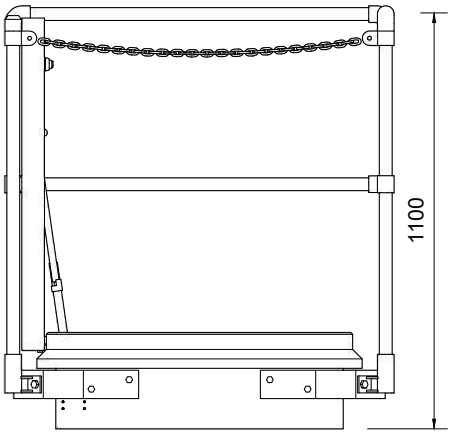

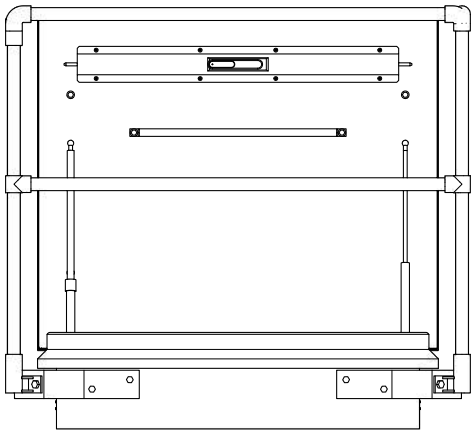

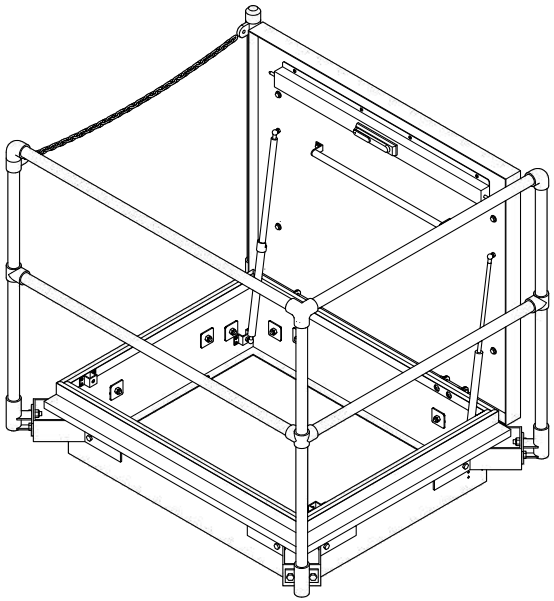

 RHB900700 Roof Hatch Barrier for SRH900700 | Material: Steel & Cast Iron | Finish: Galvanised

09 477 0820 | www.sellwood.co.nz

sellwood