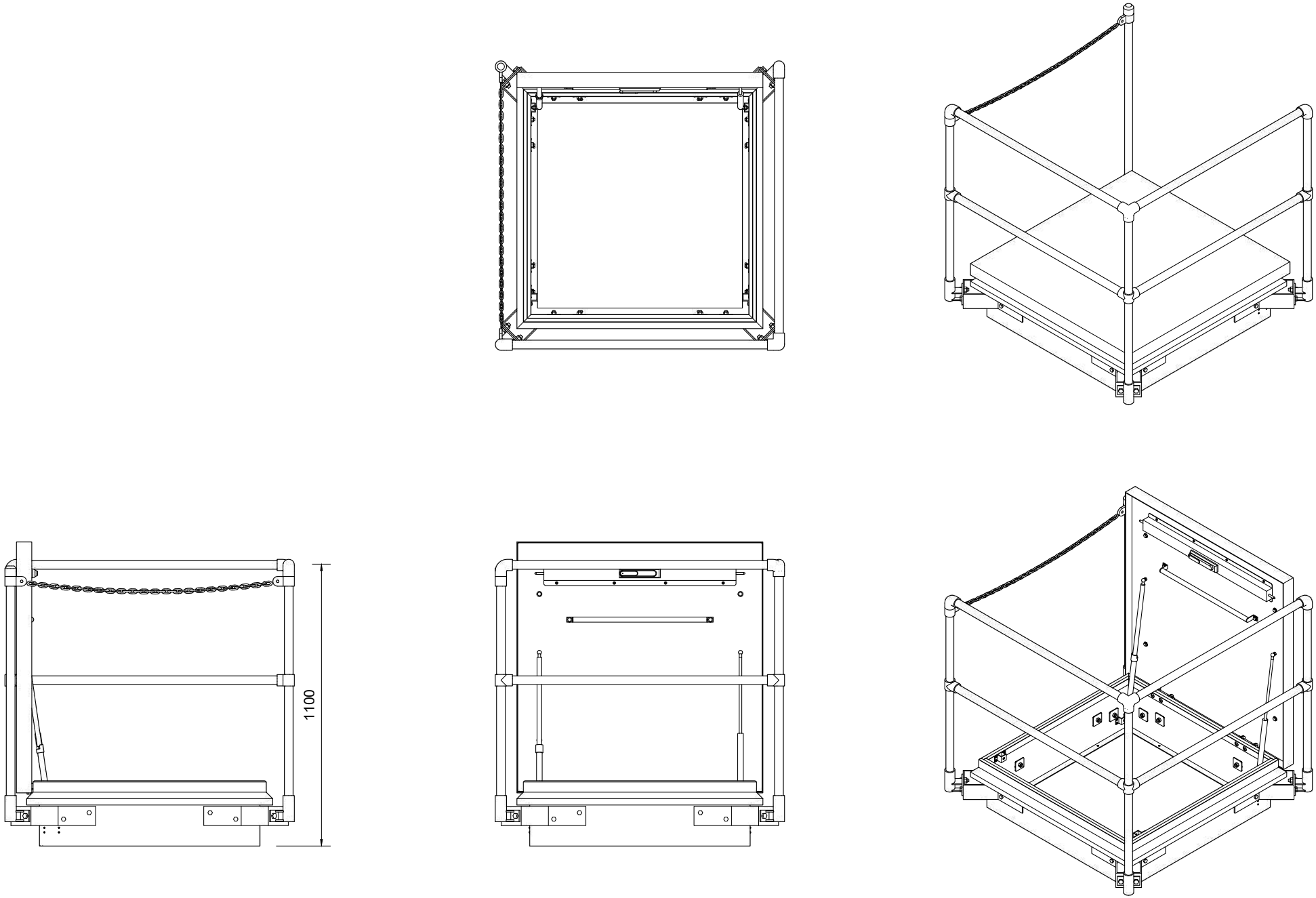


1 **RHB800800 Roof Hatch Barrier** for SRH800800 | Material: Steel & Cast Iron | Finish: Galvanised