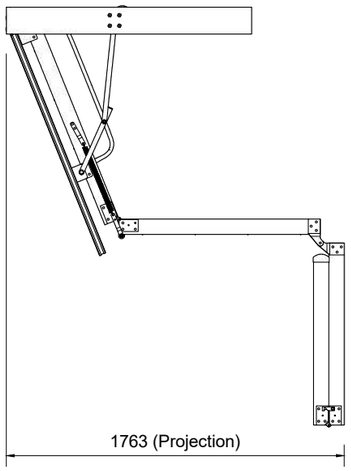

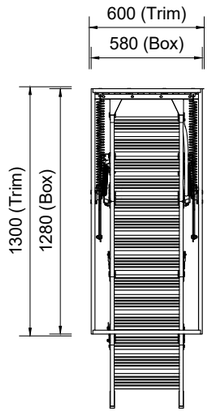

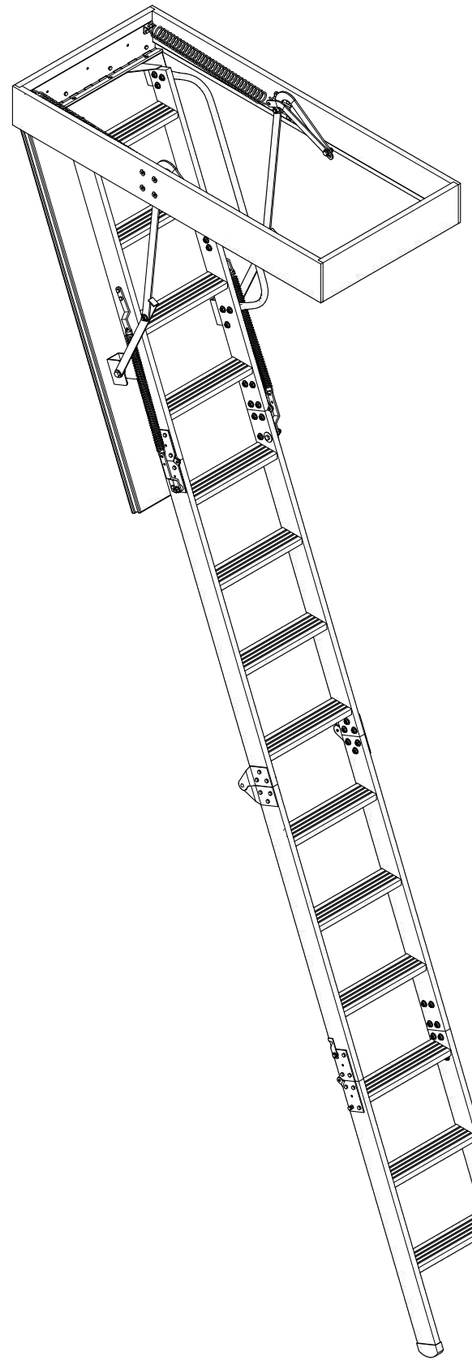

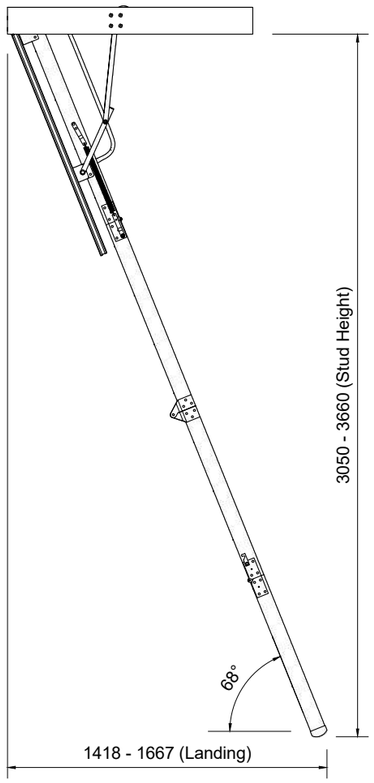

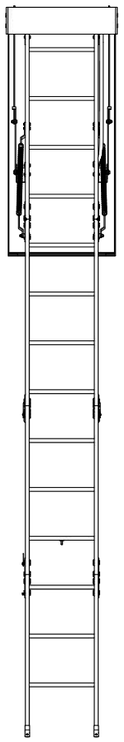

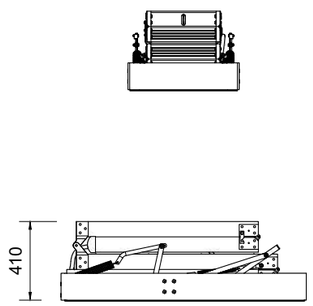

1 **P36 Attic Ladder**

sellwood.co.nz