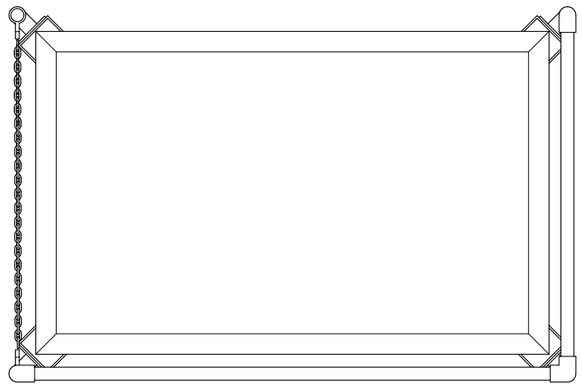

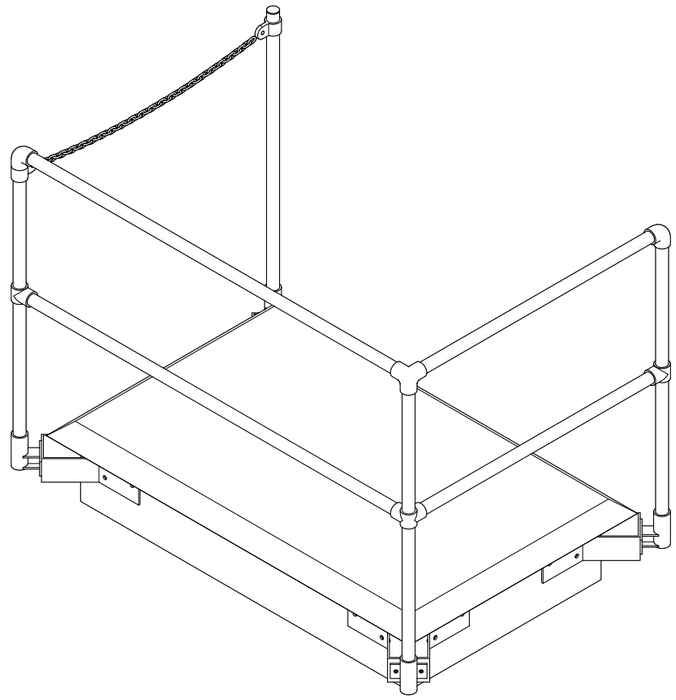

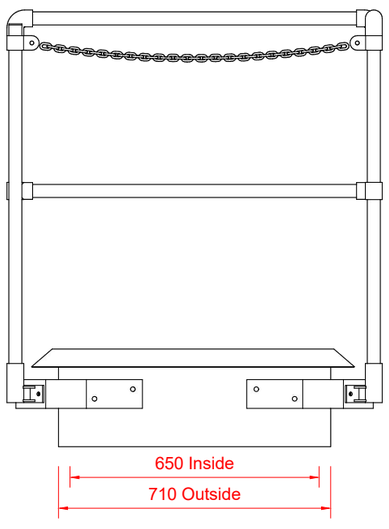

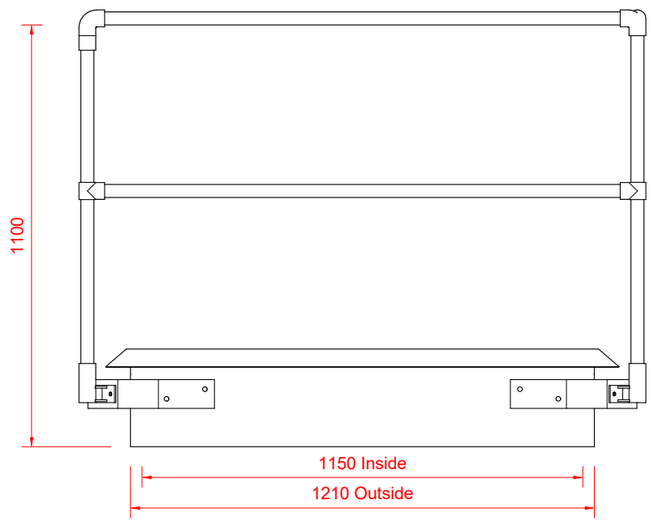

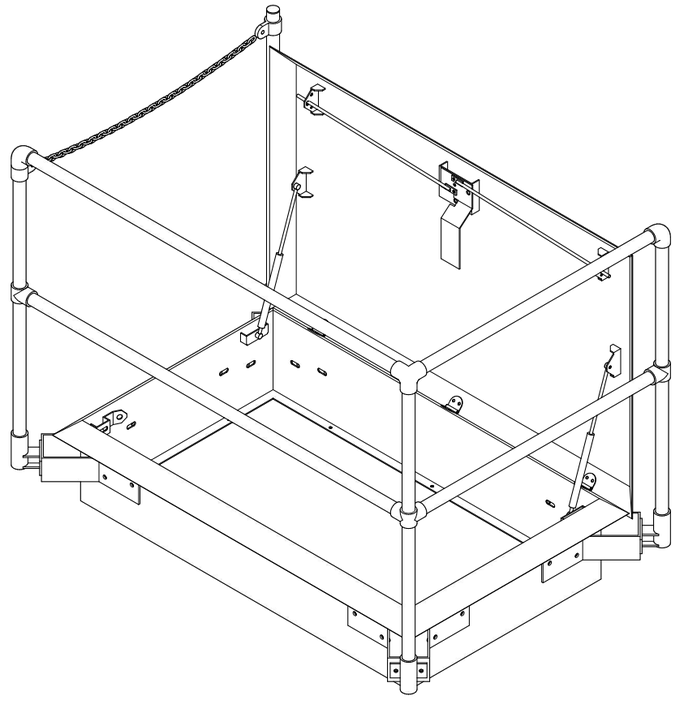

A	01	sellwood roof space access | attic storage | natural lighting	Address Sellwood Products Ltd 3/75 Apollo Drive Albany, Auckland © 2015	File Name Roof Hatch & Barrier Page Name Page 1	Date Created January 2016 Date Modified November 2016	Drawn By RLB Page Size A3	Material Roof Hatch - Aluminium Barrier - Steel & Cast Iron	Finish Hatch - Powder Coated Barrier - Galvanised	Model **SRH1150650** **RHB1150650**