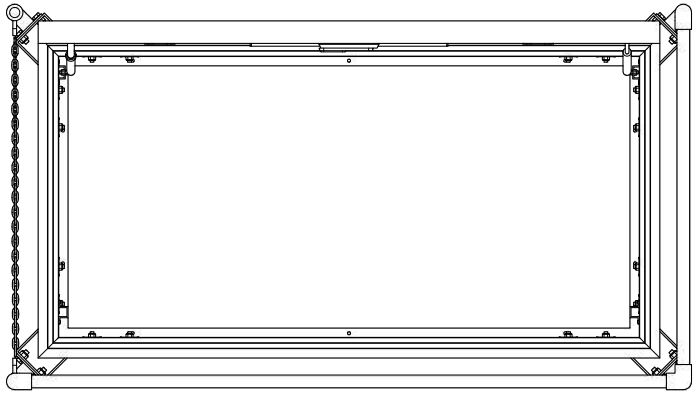

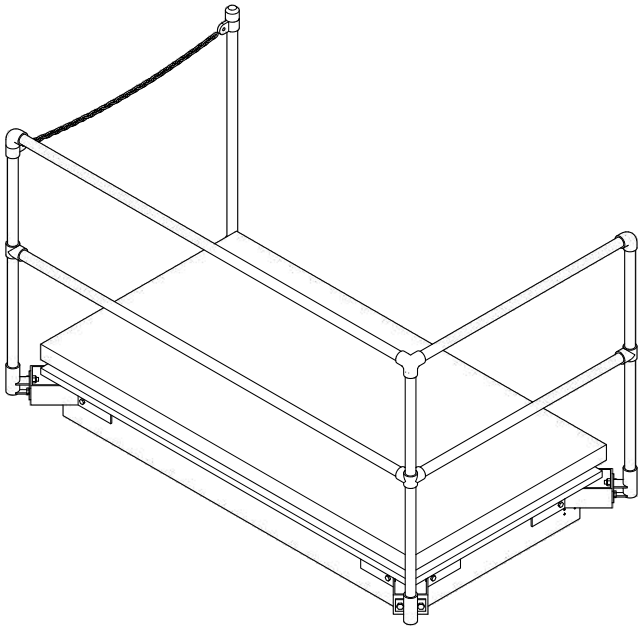

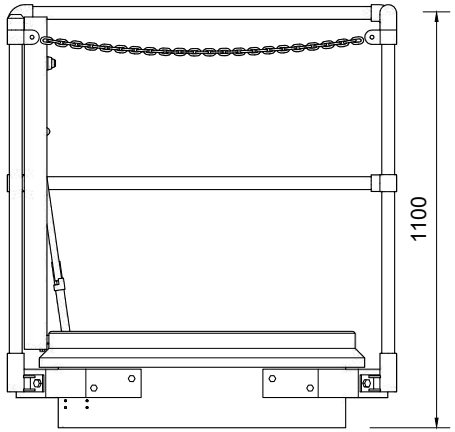

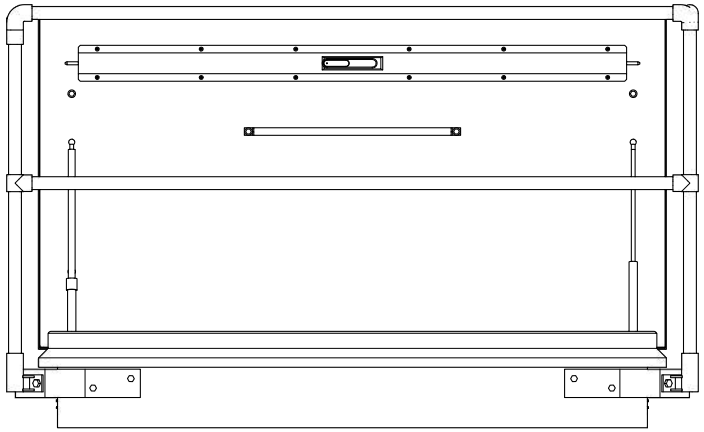

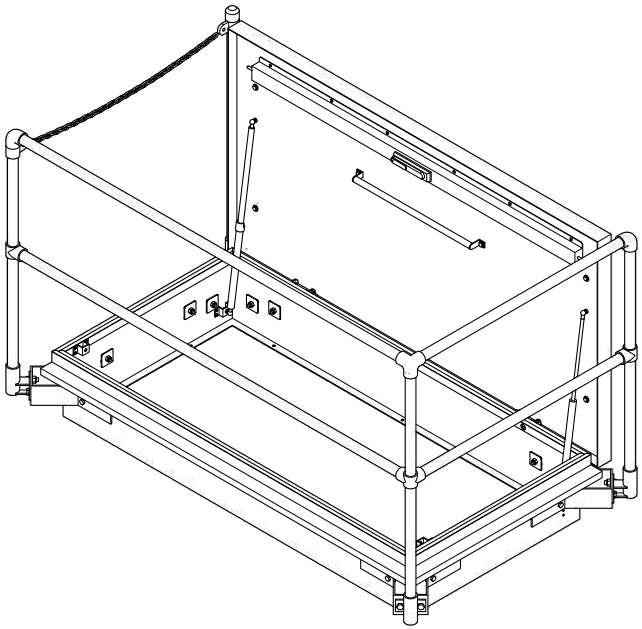

 RHB1500700 Roof Hatch Barrier for SRH1500700 | Material: Steel & Cast Iron | Finish: Galvanised

09 477 0820 | www.sellwood.co.nz

sellwood