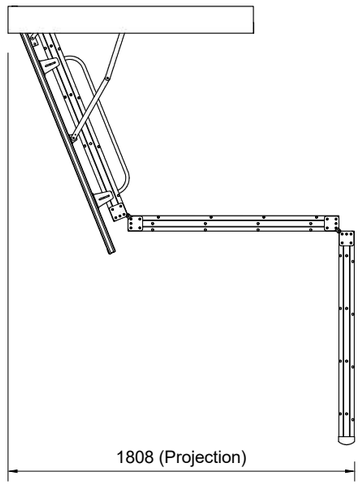

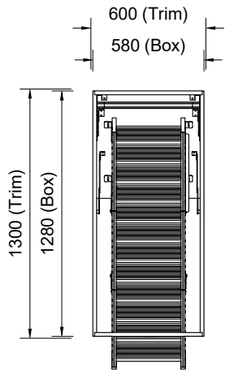

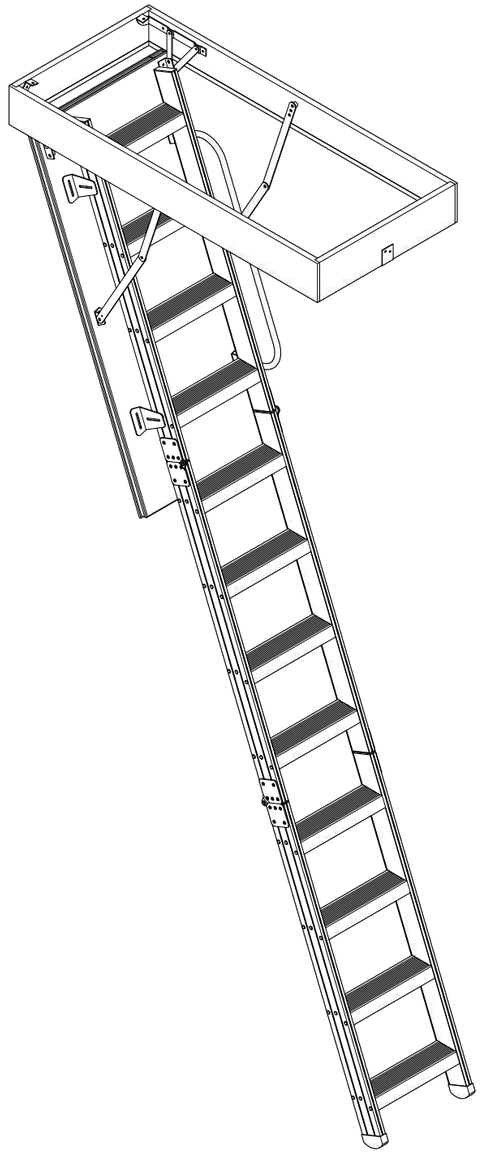

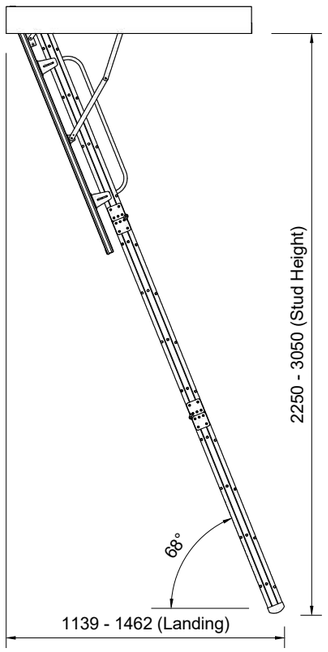

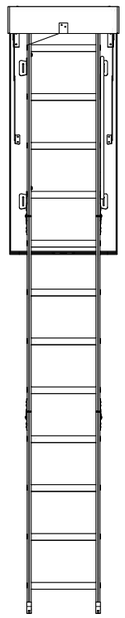

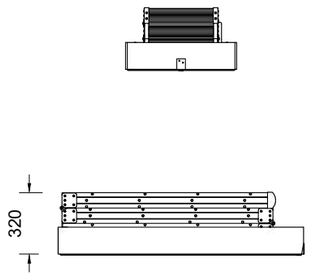

1 **FA30 Attic Ladder**

sellwood.co.nz